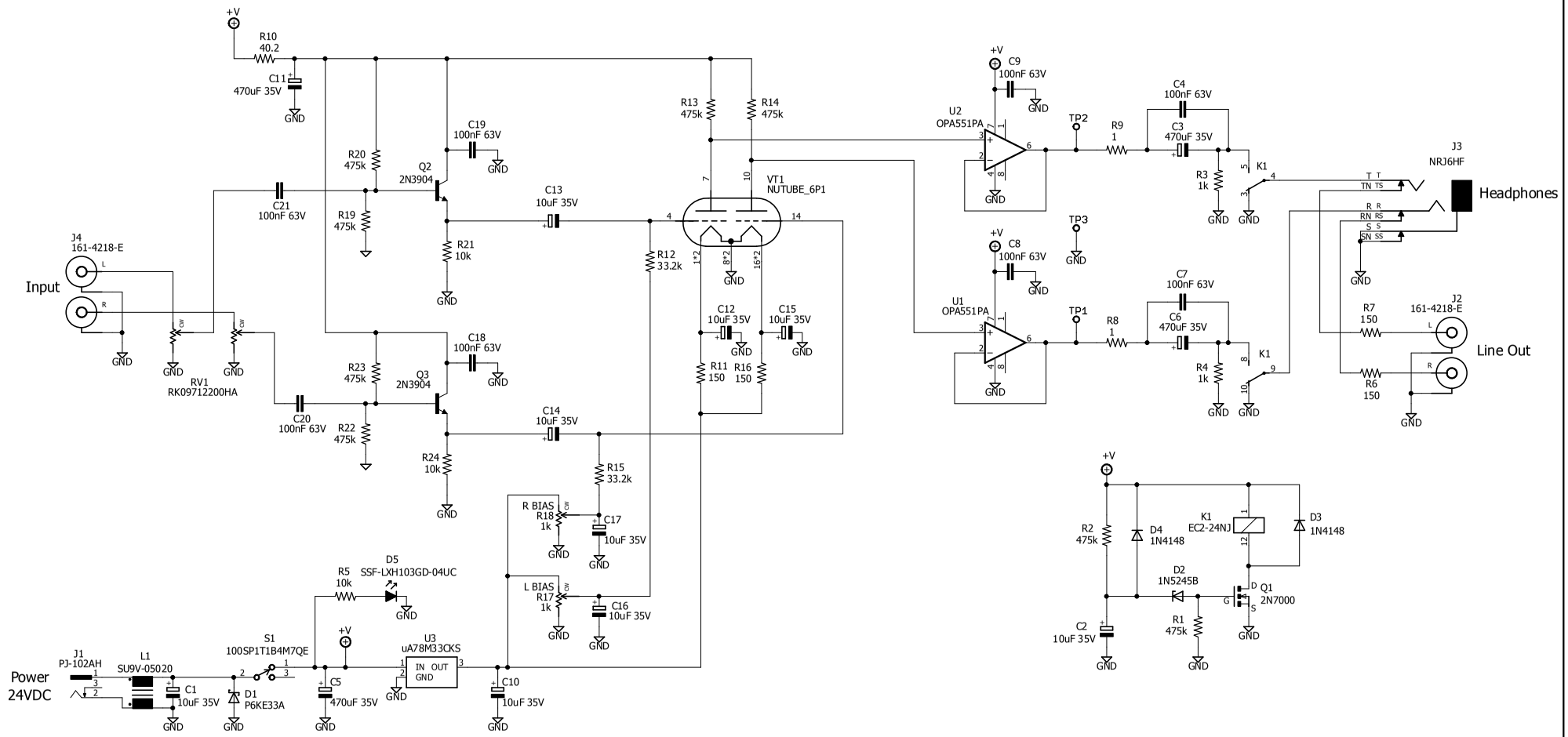

NuHybrid Headphone Amp

www.pmillett.com

TITLE: Nuhybrid1	
Document Number:	REV: B2
Date: 3/20/2017 11:21 AM	Sheet: 1/1